Roll Bar
Installation Instructions

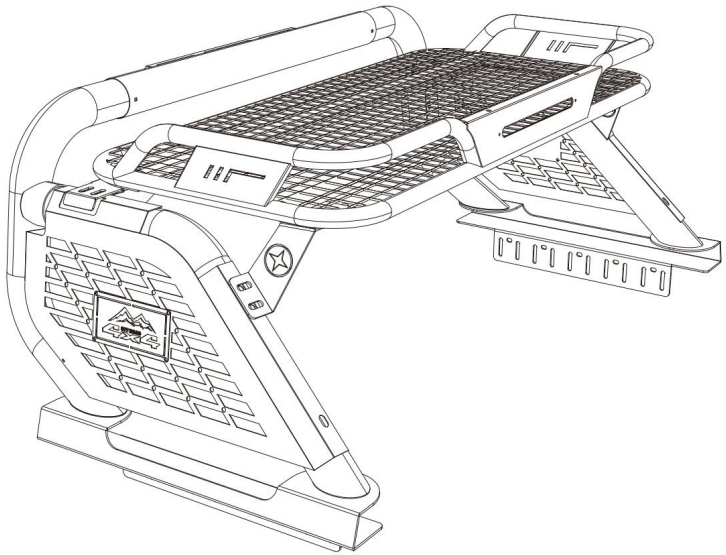









ATTENTION

Check before installation

-Remove content from box.Verify allparts are present
-Read instructions carefully before starting installation
-DO NOT over torque.Standard operating load for
ighten body mount

-The accessories shown in the instructions may differ from the actual product due to product optimization and iteration, which generally will not affect installation.
-Should you have any questions, please contact our store customer service, and we will respond to you in detail.

Parts included – illustrated view

Part Name	Part Image	Quantity		Part Name	Part Image	Quantity
Side Panel		1 pc for left & 1 pc for right		Base		1 pc for left & 1 pc for right
Luggage Rack Support Plate 1	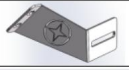	1 pc for left & 1 pc for right		Rear Tube Joint Rubber Bushing		2 pcs
Luggage Rack Support Plate 2		2 pcs		Extended Light Bracket		2 pcs
Cross Tube		**1 pc**		Lower Bending Plate		4 pcs
Luggage Rack	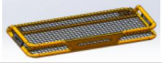	**1 pc**		Slotted Nut Plate	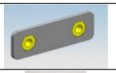	4 pcs
Front Tube		1 pc for left & 1 pc for right		Cross Tube Rubber Grommet		2 pcs
Rear Tube		1 pc for left & 1 pc for right		Rubber Plug		2 pcs

Screw Parts List

Part Name	Part Image	Quantity	Model/Specificati	Remarks
Socket Head Cap Screw		4	M10*35	Base
Flat Washer		4	Φ10*25*2.0	
Spring Lock Washer		4	Φ10	
Hexagonal Head Bolt		8	M8*35	Vehicle Installation
Flat Washer		8	Φ8*20*2.0	
Spring Lock Washer		8	Φ8	
Socket Head Cap Screw-Stud		2	M10*35	Front & Rear Tube Connection
Flat Washer		2	Φ10*20*1.5	
Spring Lock Washer		2	Φ10	
Socket Head Cap Screw		30	M8*25	Cross Tube + Luggage Rack + Side Panel
Flat Washer		38	φ8*20*1.5	
Spring Lock Washer		30	φ8	
Flange Nut		8	M8	
Socket Head Cap Screw		4	M8*25	Long Light Bracket
Flat Washer		8	φ8*20*1.5	
Spring Lock Washer		4	φ8	
Flange Nut		8	M8	
Hex Key (Allen Wrench)		1	S=5	
Hex Key (Allen Wrench)		1	S=6	
Hex Key (Allen Wrench)		1	S=8	

Installation Step 1

Screws required for this step

Part Name	Part Image	Quantity	Model/Specification
Socket Head Cap Screw-Stud		1	M10*35
Flat Washer		1	Φ10*20*1.5
Spring Lock Washer		1	Φ10

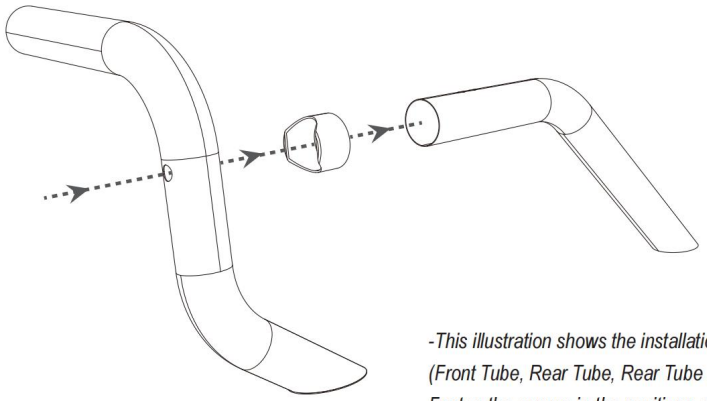

-This illustration shows the installation of the side components (Front Tube, Rear Tube, Rear Tube Joint Rubber Bushing). Fasten the screws in the positions and directions shown by the dashed arrows.

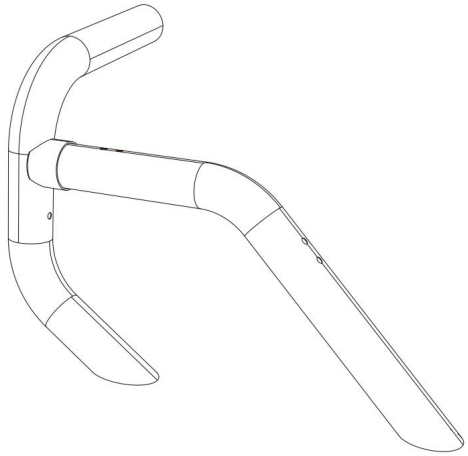

-Finished installation view
-Repeat the same procedure on the other side.

Installation Step 2

Screws required for this step

Part Name	Part Image	Quantity	Model/Specification
Socket Head Cap Screw		6	M8*25
Flat Washer		6	φ8*20*1.5
Spring Lock Washer		6	φ8

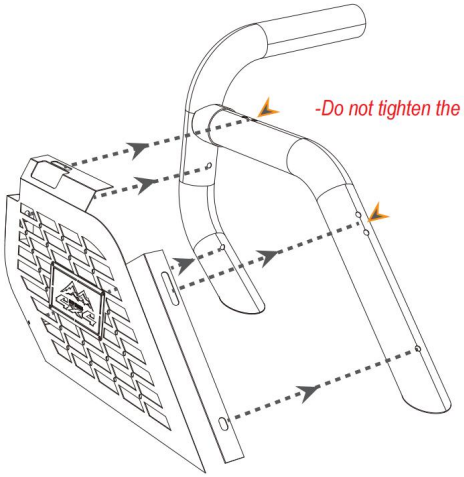

-Do not tighten the screws at the orange arrows.

-Installation diagram for the Side Panel. Secure the screws at the positions indicated by the dashed arrows (a total of six mounting holes need to be fastened).

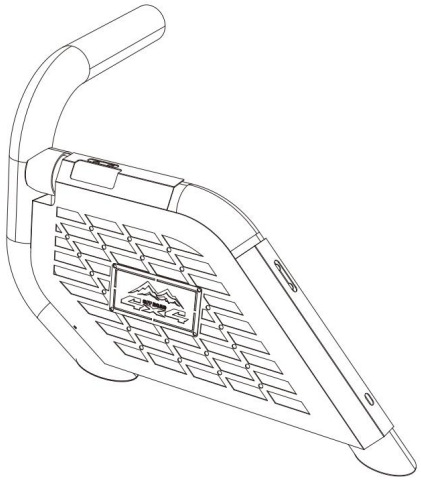

-Finished installation view
-Repeat the same procedure on the other side.

Installation Step 3

Screws required for this step

Part Name	Part Image	Quantity	Model/Specification
Socket Head Cap Screw		2	M10*35
Flat Washer		2	Φ10*25*2.0
Spring Lock Washer		2	Φ10

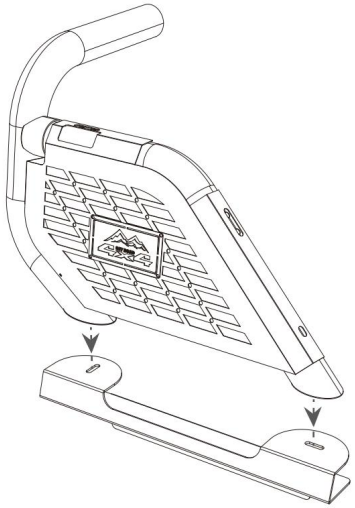

-Installation diagram for the Base. Secure the screws at the positions indicated by the dashed arrows (a total of two mounting holes need to be fastened).

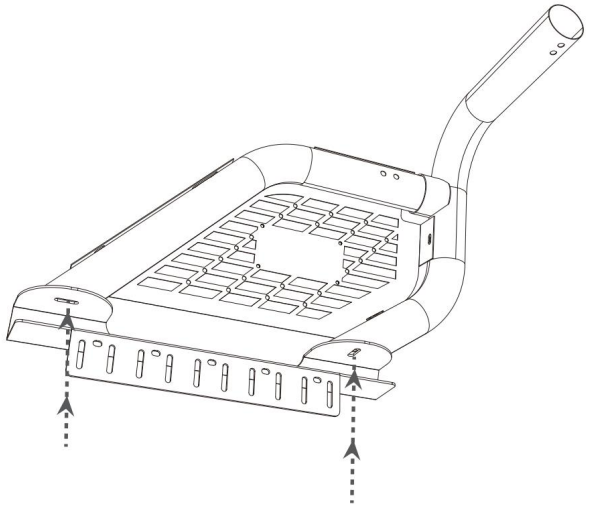

-Finished installation view
-Repeat the same procedure on the other side.

Installation Step 4

Screws required for this step

Part Name	Part Image	Quantity	Model/Specification
Socket Head Cap Screw		4	M8*25
Flat Washer		4	φ8*20*1.5
Spring Lock Washer		4	φ8

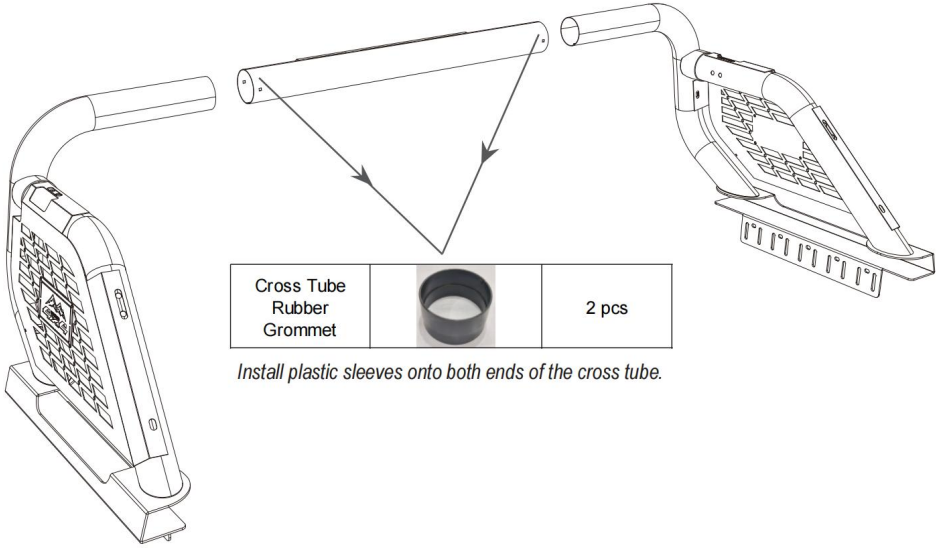

Cross Tube Rubber Grommet		2 pcs

Install plastic sleeves onto both ends of the cross tube.

Rear-Bottom View

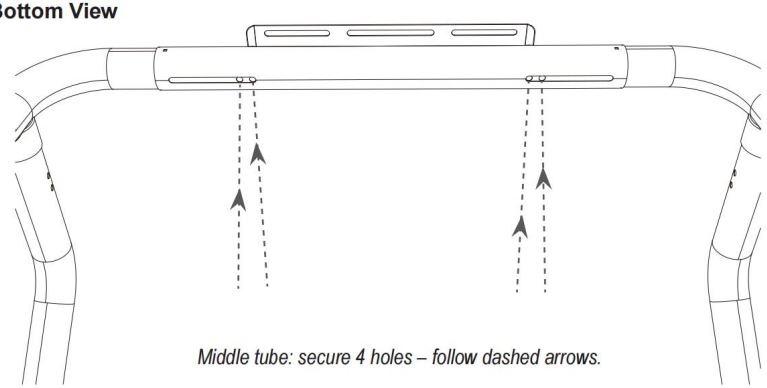

Middle tube: secure 4 holes – follow dashed arrows.

Installation Step 5

Screws required for this step

Part Name	Part Image	Quantity	Model/Specification
Socket Head Cap Screw		12	M8*25
Flat Washer		12	φ8*20*1.5
Spring Lock Washer		12	φ8

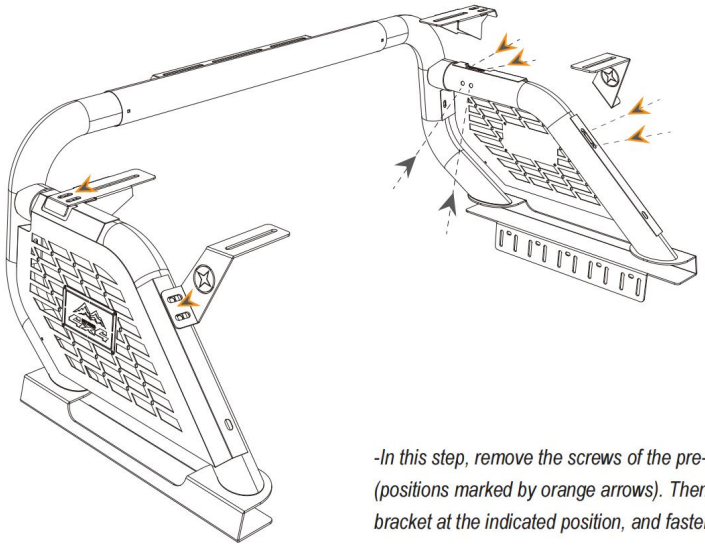

-In this step, remove the screws of the pre-installed side panels (positions marked by orange arrows). Then place the cargo basket bracket at the indicated position, and fasten it in place.

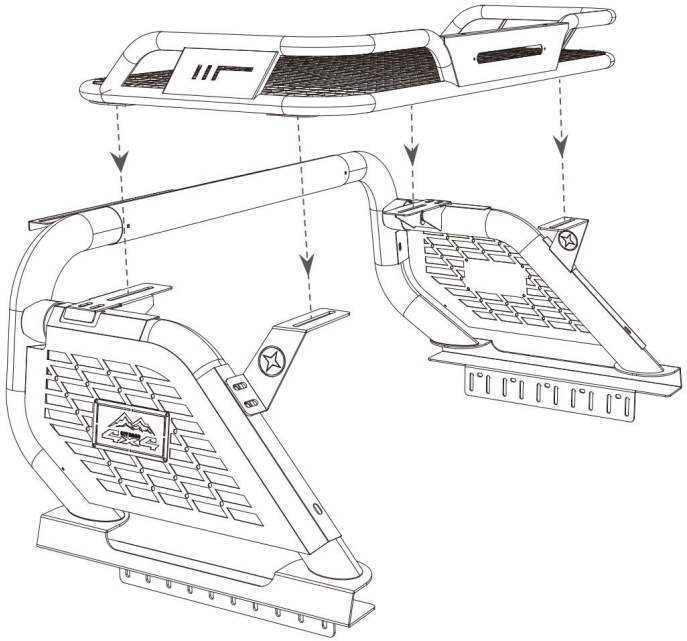

-Place the product onto the cargo basket bracket following the dashed-arrow indication, align the mounting holes. (Fasten with screws as shown above.)

Installation Step 6

Screws required for this step

Part Name	Part Image	Quantity	Model/Specification
Socket Head Cap Screw		8	M8*25
Flat Washer		8	φ8*20*1.5
Spring Lock Washer		8	φ8
Flange Nut		8	M8

Lift onto vehicle with 2+ people (prevent paint scratching). Maintain a fist-width clearance from rear window.

Vehicle-mounted Installation Example

