| Part Name | Qty | Specification | Image | Remarks |
|---|---|---|---|---|
| Socket Head Cap Screw | 12 | M8*35 |  | Vehicle Mounting Screws |
| Flat Washer | 12 | Φ8*24*2 |  | |
| Spring Washer | 12 | Φ8 |  | |
| Pan Head Socket Screw | 16 | M6*45 |  | For installation of patterned decorative panels |
| Flat Washer | 16 | φ6*12*1.5 |  | |
| Hexagon Flange Nut | 16 | M6 |  | |
| Nylon Cylinder | | |  | |
| Pan Head Socket Screw | 32 | M8*20 |  | These screws are used to connect the side panels and top parts. and Base Mounting |
| Flat Washer | 32 | φ8*24*2 |  | |
| Spring Washer | 32 | φ8 |  | |
| Hexagon Flange Nut | 16 | M8 |  | |
| Hex key | 1 | S=6 |  | |
| Hex key | 1 | S=5 |  | |
| Rectangular Nut | | |  | This kit is designed for installation on vehicles with trunk rails. |

# Roll Bar TGH-2633

## Installation Instructions

### Finished Appearance Diagram

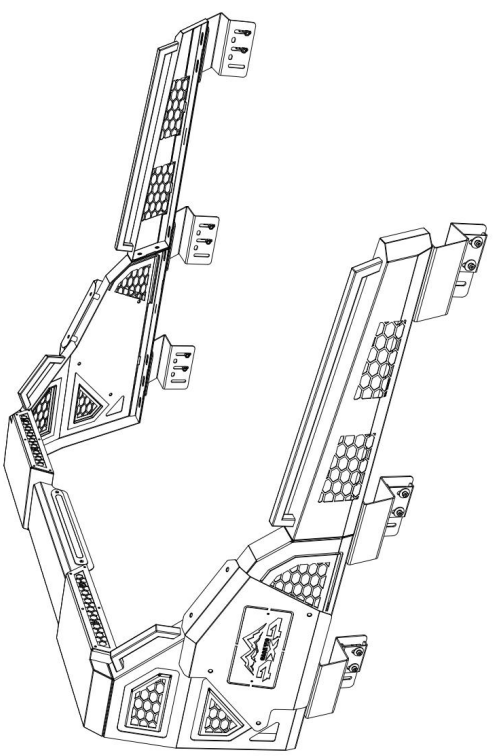

### Parts List

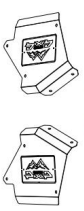

Part C

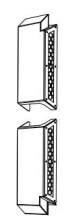

Part B

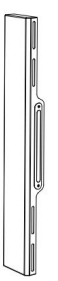

Part A

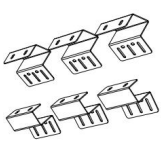

Part F

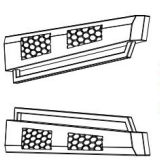

Part E

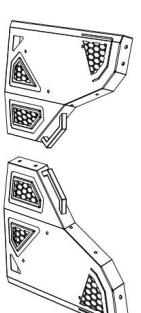

Part D

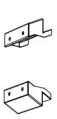

Part H



Part G

# STEP 1:

STEP 1.1:

*First, locate parts B, C, D, E, and F, and the required screws (refer to the Remarks in Group 2 on page 2 and Group 3).*

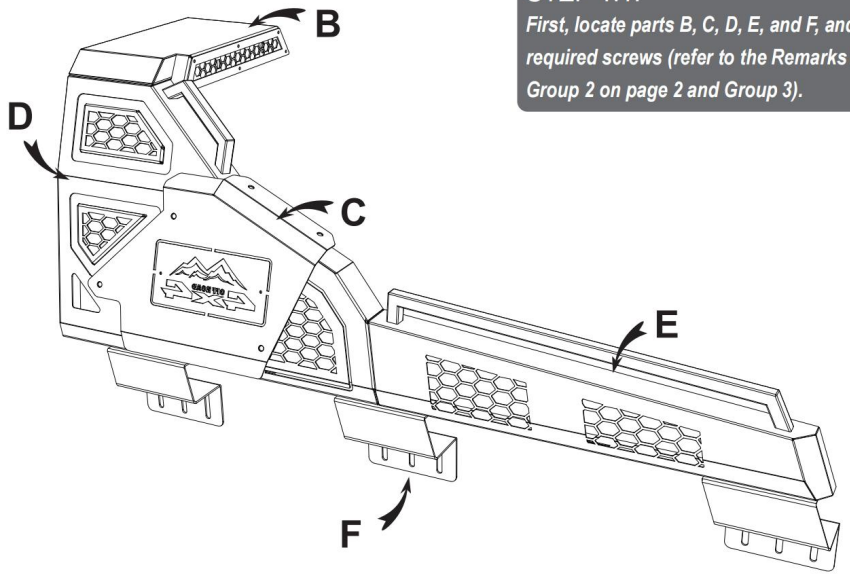


STEP 1.2:

*Following the component positions shown in the completed view on the left, first assemble the decorative panel (Part C) and Part D.*

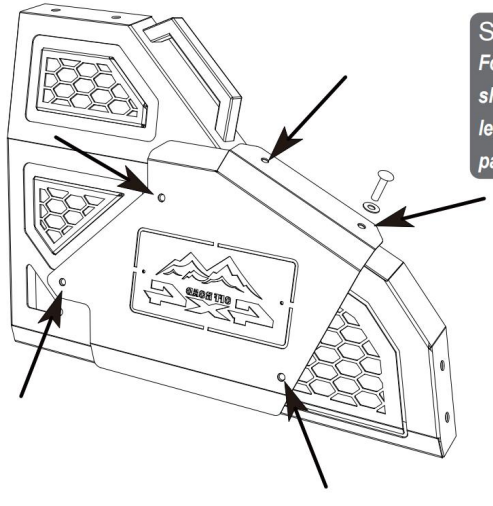

STEP 1.3:

*The right image shows the installation positions of the screw accessories for Step 1.2.（The same installation applies to the other four holes.*

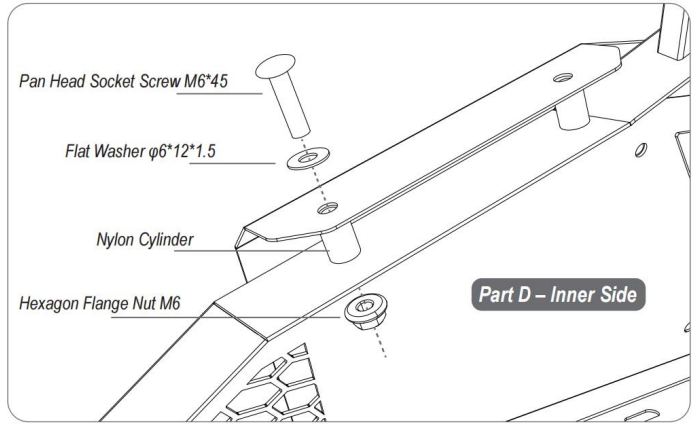


STEP 1.4:

*Splice Parts E and D as indicated by the arrows, and install the screws as shown in the upper right diagram.*

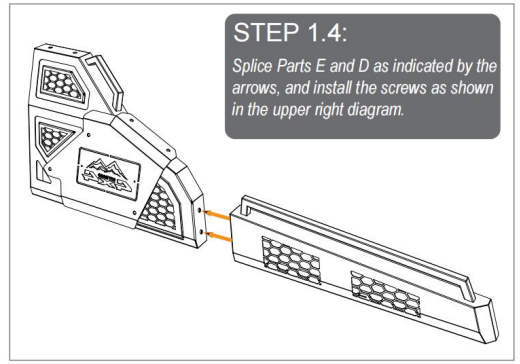

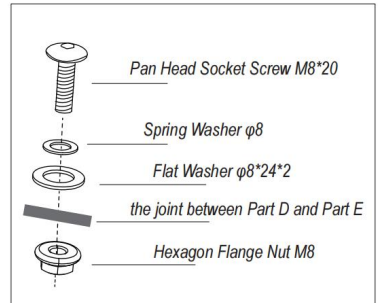


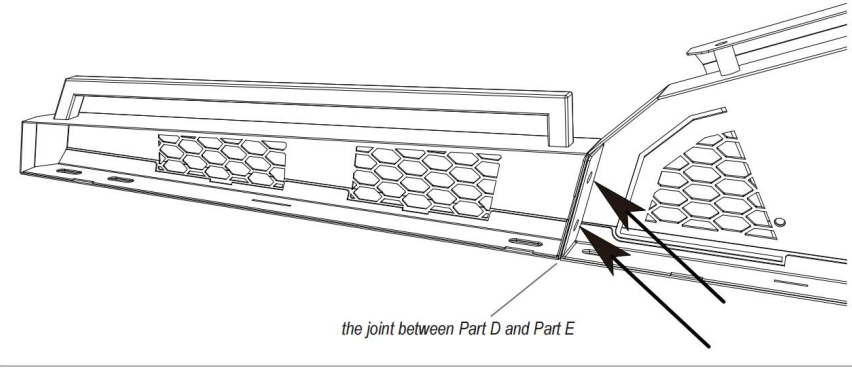

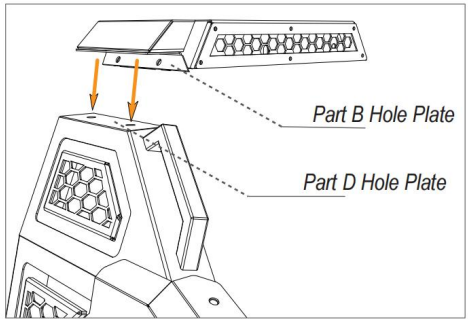


STEP 1.5:

***Splice Parts B and D as indicated by the arrows, using the screws shown in the figure below.***

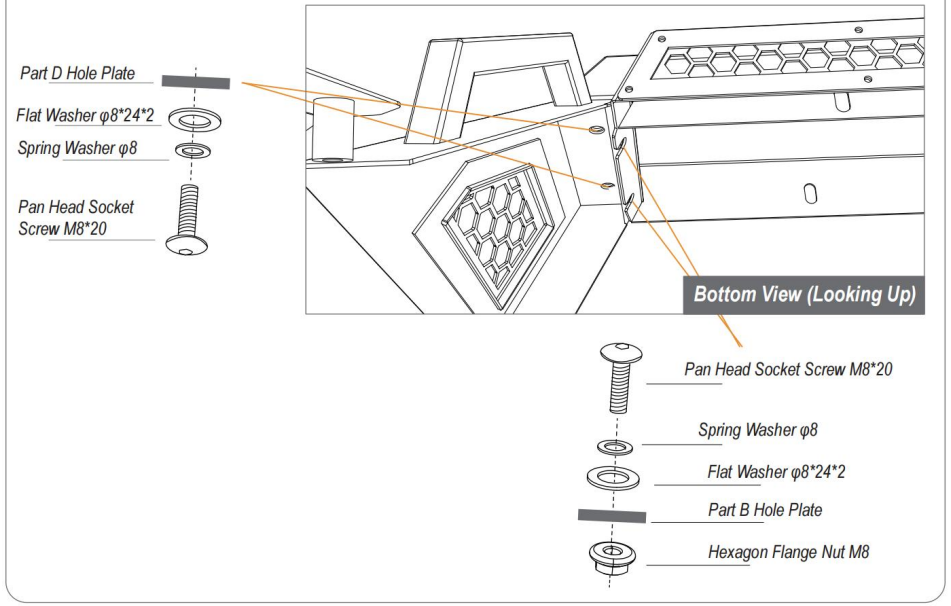


***After completing the above steps, repeat the procedure on the other side, as it is symmetrical.***

## *STEP 2:*

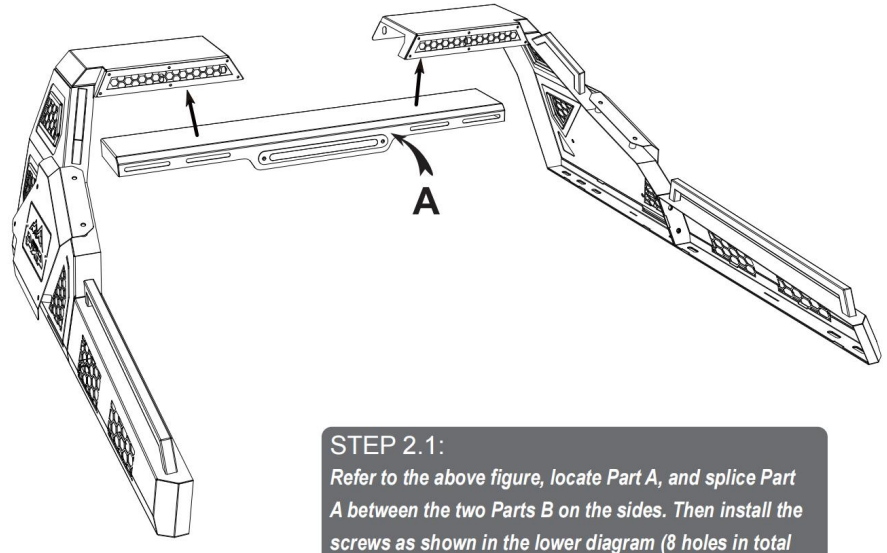


STEP 2.1:

***Refer to the above figure, locate Part A, and splice Part A between the two Parts B on the sides. Then install the screws as shown in the lower diagram (8 holes in total need to be secured).***

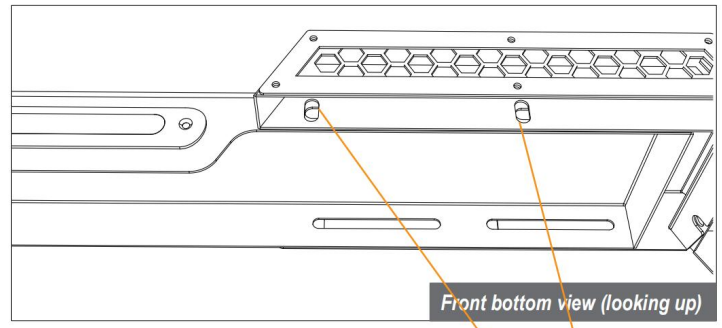


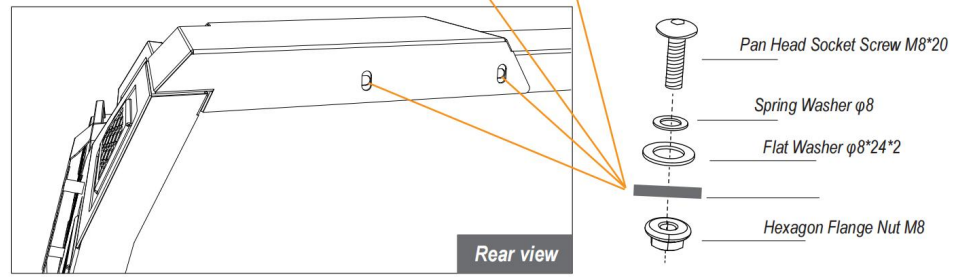

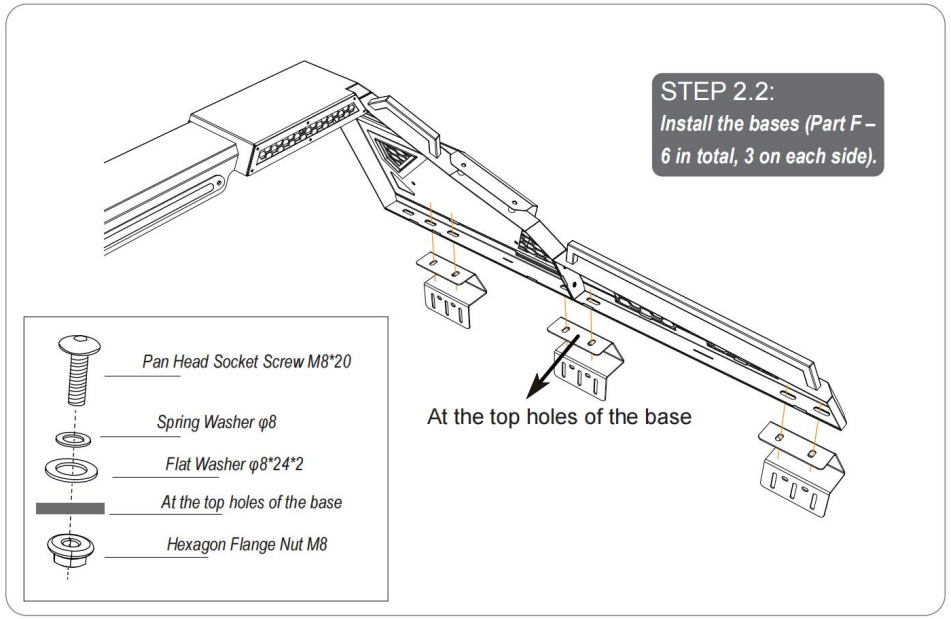


| Part Name | Qty | Specification | Image | Remarks |
|---|---|---|---|---|
| Socket Head Cap Screw | 12 | M8*35 |  | Vehicle Mounting Screws |
| Flat Washer | 12 | Φ8*24*2 |  | |
| Spring Washer | 12 | Φ8 |  | |

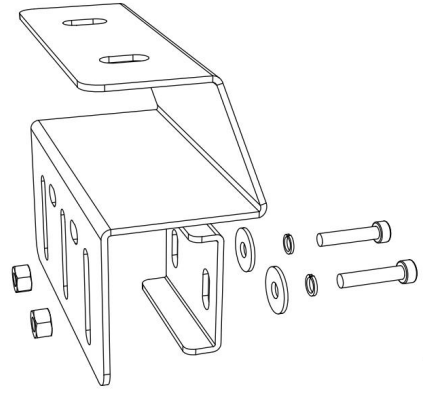






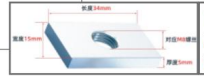

This part is intended for installation on vehicles equipped with rails.

## STEP 3:

STEP 3.1:

- *Final step: Install the product onto the vehicle. Before doing so, please note the following: first adjust the product's overall width to match the pickup truck bed width, and handle with care when lifting it onto the vehicle. This operation requires at least two people to avoid scratching the vehicle paint.*
- *After lifting the product onto the truck bed, adjust it to a distance of about 1 to 1.5 fist-widths from the rear window, then proceed with the securing in the next step.*

***If you feel the product is not high enough, you can install Riser Part H.***

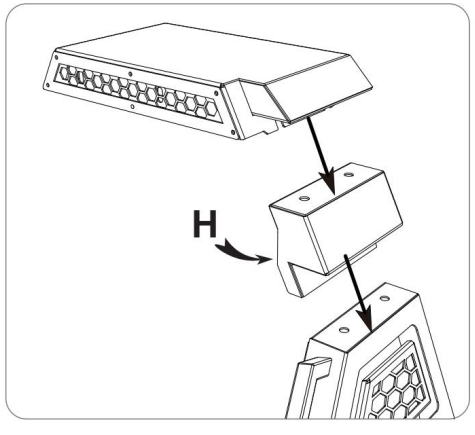


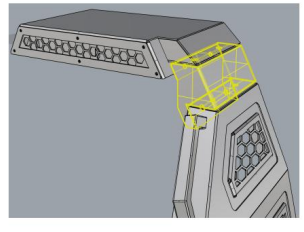

***Any remaining screws may be used for additional assembly at your discretion.***

*Disclaimer*

*The illustrations and descriptions in this manual are for reference only. The actual product may differ due to improvements or variations, but such differences will not normally affect the installation process. If you experience any difficulties, please do not hesitate to contact our customer service department.*